GIORIK
INNOVATIVE COOKING EQUIPMENT SINCE 1963

MOVAIR
FROM SIDE TO SIDE

NMTE5X_L

Combi Electric Oven - 5 (GN 1/1_ 60x40)

TECHNICAL FEATURES

- Heating of cooking chamber with high performance INCOLOY heathing elements.
- 3 different controlled fan speeds.
- Double-glazed ventilated door (panels can be opened for easy cleaning).
- Cooking chamber with moulded bottom
- Cooking chamber lighting with LED.
- Capacitive 7” touch screen with glass surface
- Adjustable door hinges.
- AISI 304 cooking chamber with rounded corners.
- Height adjustable feet.
- USB port for uploading and saving recipes and for firmware updating.
- Motorised vent valve opening
- Wi-Fi
- Extra power version

OPTIONS:

- NMTE5X**W** Washing system included
- NMTE5X_**L** left side hinges
- NMTE5X_**R** right side hinges
- Optional rack for 60x40 trays.
- Optional triple glazed door.

USER INTERFACE:

TOUCH SCREEN PANEL 7”

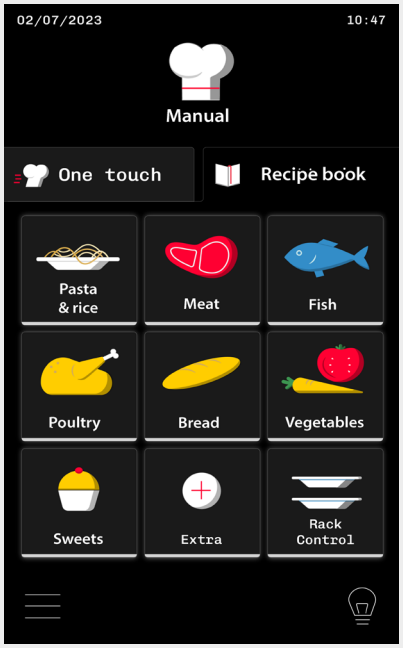

- Temperature control from 50° to 300°C
- Time control from 1’ to 99h59’ and infinite function.
- Cooking modes: convection, steam, combi convection/steam.
- “One Touch” cooking mode: immediate start of the cooking cycle with “one touch programs”.
- Preset cooking programmes. Possibility of controlling 9 cooking phases for each programme.
- Cooking with “Rack Control”
- Interface “Recipe Tuner”
- Delta T cooking.
- Cooking with probe (probe not included) .
- Multi level cooking with “Easy service”
- Hold function.
- Cooldown during cooking.

Convection, steam, convection with steam in combi mode, humidification and dehumidification, cook with core probe, hold in temperature for overnight cooking.
These are the Movair’s functions, an oven line which is suitable to take either gastronorm and confectionery size trays and containers.

OneTouch

To start with a single move the preferred recipes selected and memorized by the user with the silhouette and the name he prefers.

RecipeTuner

The RecipeTuner interface makes it possible to modify and personalise the various programs simply and intuitively. RecipeTuner changes according to the type of cooking set, to regulate cooking, browning, degree of humidity and of leavening.

EasyService

level control cooking

The new Rack Control enables different dishes to be cooked at the same time at various levels. What’s more, with EasyService, a new Rack Control function, all the dishes can be served at the same time.

GIORIK
INNOVATIVE COOKING EQUIPMENT SINCE 1963

MOVAIR
FROM SIDE TO SIDE

NMETE5X_L

Combi Electric Oven - 5 (GN 1/1_ 60x40)

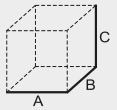	VOL./PESO Vol./Weight	VAC 400V-3N 50/60 Hz	POTENZA EL. CAMERA Oven cavity el. power	DISTANZA TRA LE TEGLIE Distance between the layers	DIM. CAMERA Cavity net dimension
(A x B x C) mm	m^3/kg	kW	kW	mm	mm
907x762x643 **5 GN 1/1** **5 EN 60x40**	0,39 / 65	7,7	7,4	74	645x420x450

ACCESSORIES

- Stand TSP0500
- Racks for stand TSP0500 cod. 2017691
- Proofer CLP0810 or CLP0811
- Proofer CA9308
- Proofer CA9312
- Hood 7080517
- Condensation hood 7080560 or 7080583
- Core probe 6000131 or Multipoint core probe 6000132
- Probe for sous-vide cooking 6000129
- External hand spray 7080003
- Stacking kit on demand

ACCESSORIES FOR PATISSERIE USE

- 2023826C 4 trays 60x40 size 80.
- 2024356C 4 trays 60x40 size 90

A Electrical connection
B Softened water inlet (G3/4)
C Equipotential bonding
D Drain (Ø30)
E Humidity discharge (Ø50)
F Detergent hose inlet (NMTE5XW model)

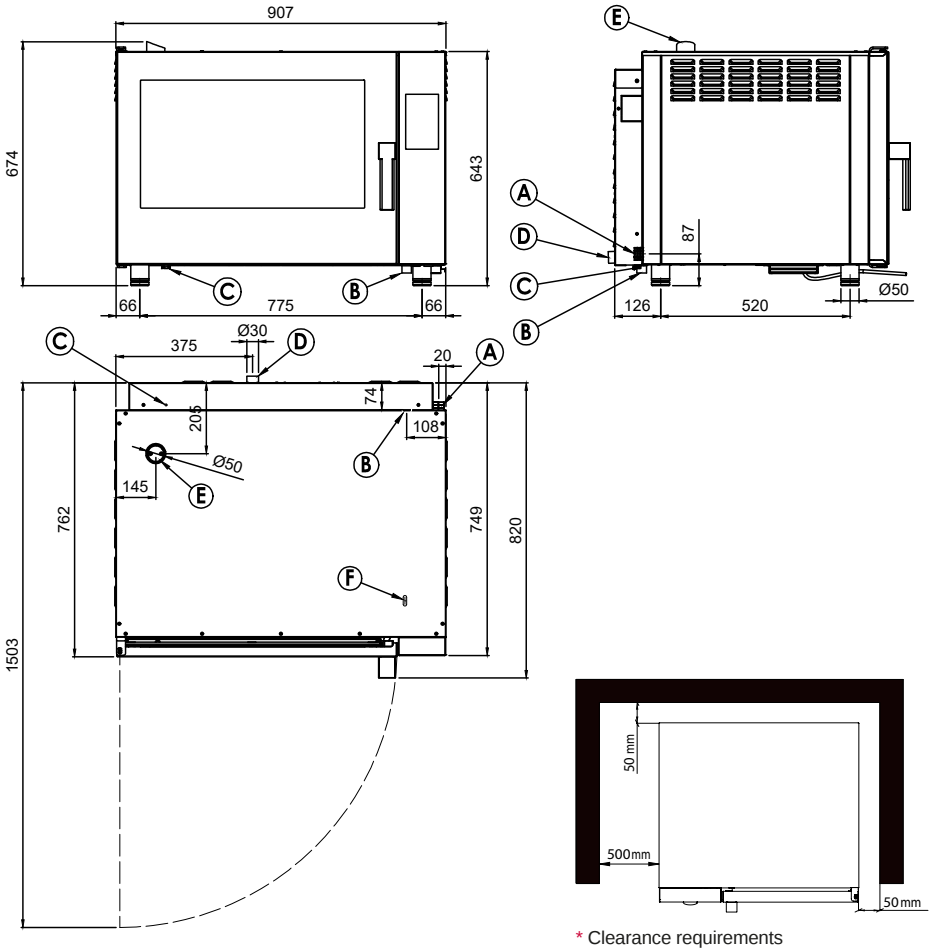

* Clearance requirements

NOTE

* Drain line must be vented

Giorik SpA
via Cavalieri di Vittorio Veneto, 14
32036 Sedico (BL) - ITALY

tel. +39.**0437.807200**
fax +39.**0437.807001**
e-mail: info@giorik.com

GIORIK
INNOVATIVE COOKING EQUIPMENT SINCE 1963

INSTALLATION REQUIREMENTS

The installation of gas ovens requires the analysis of combustion fumes, otherwise the warranty will be void. In addition, all installations (gas or electric) must always be adapted to local electrical systems and regulations on ventilation and plumbing connections.

WATER REQUIREMENTS and WATER CONNECTION

The following indicators may determine the validity or otherwise of the warranty.

Failure to comply with the minimum water requirements may cause corrosion and oxidation or technical problems, which can then cause a rapid decline in the performance and reliability of the appliances used to cook food.

The buyer is responsible for the water treatment procedures and must ensure that the incoming water meets the requirements tested and approved by Giorik below.

INCOMING WATER

Pressure (recommended)	1.5-3 bar (150-300 kPa)
PH	7.0-8.5
TDS (fixed residue)	40-150 mg/L)
Hardness (CaCO3)	3°f - 9°f (30-90 ppm; 1.5-5°d)
Langelier index	> 0.5

METAL SALT AND ION CONTENT

Cl Chlorides	< 20 mg/L
Sulphates + Nitrates	< 20 mg/L
Cl_2 Chlorine free	< 0.1 mg/L
Chloramines	< 0.5 mg/L
Iron	< 0.1 mg/L
SiO_2 Total Silica	< 10 mg/L

ACCESSORIES FOR WATER TESTING AND TREATMENT

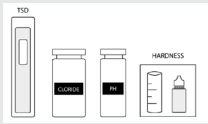	**2027717**	WATER ANALYSIS KIT Contains: conductivity meter, hardness test, 50 strips for pH testing and 40 strips for chloride testing
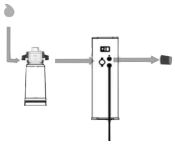	**7080556**	COMPLETE REVERSE OSMOSIS SYSTEM Reverse osmosis system for obtaining pure water with almost complete separation of dissolved minerals, salts and other interfering substances. The chlorine filter and a storage tank are also included.
	7080558	LIMESCALE FILTRATION SYSTEM Filtration system for the optimisation of drinking water for the food and beverage sector. Reduces calcium, magnesium, unpleasant odours and chlorine. Composed of cartridge + head

DETERGENTS

In case of use of products for automatic oven washing other than official GIORIK products or in any case products approved by the manufacturer, the warranty will be considered void. Giorik cleaning products have in fact been developed and tested for Giorik ovens, and only if these are used is it possible to guarantee an adequate level of cleaning and an optimal life cycle for the oven and its components.

	7080542	GIORIK DEGREASE and RINSE 2 in 1 2 in 1 degreasing detergent and rinse aid for ovens with automatic washing
	7080533	** GIORIK BOILER DESCALER - Only for Ovens with Boiler
	7080537	DETERGENT AND DEGREASER for manual cleaning
	7080536	**TABS - Only for ovens with closed loop wash Evolution H and Kore B-I

Giorik SpA
via Cavalieri di Vittorio Veneto, 14
32036 Sedico (BL) - ITALY

tel. +39.**0437.807200**
fax +39.**0437.807001**
e-mail: **info@giorik.com**