DISHWASHER SRC-2200DS90CV 400/50/3N

85/126 baskets per hour (up to 2.200 plates/hour).

P/N 1302506

Sales Description

Washing + rinsing.
2 speeds.

- ✓ Fully stainless steel jacket.
- ✓ Inlet and outlet splash guards are standard.
- ✓ Stainless steel central rack feed system.
- ✓ Process cycles are divided by rubber curtains.
- ✓ Automatic cycle start.

Economy

- ✓ Energy saving rinse supply switch.
- ✓ Pressure controller in the rinse section to limit consumption.
- ✓ Programmed automatic stops if there is no loading.
- ✓ Stop and freezing of timer when the limit switch actuates.

Cleaning and maintenance

- ✓ Wide pivoting door allowing access for cleaning or inspection purpose.
- ✓ Detachable arms and dispersers for easier cleaning.
- ✓ Sloped removable stainless steel filters with independent removable basket.
- ✓ Easy boiler emptying by loosening a hose.
- ✓ Failures are easily detected thanks to the warning lights.
- ✓ Easy to repair without moving the machine.

Washing

- ✓ Stainless steel wash arms and deep-drawn dispersers.
- ✓ Efficient and durable wash arm dispersers.
- ✓ Powerful, self-draining vertical wash pump.
- ✓ Easy to install detergent dispenser intake in washing tank. Rinsing

Rinsing

- ✓ Stainless steel rinse arms and powerful, stainless steel, deep-drawn dispersers.
- ✓ Automatic boiler filling with no failure risk for heating elements.
- ✓ Temperature control with high precision probes.
- ✓ Visualisation and adjustment of washing and rinsing temperatures in the digital display by pressing a button.
- ✓ Easy to install rinse aid dispenser intake in boiler.

Includes

- ✓ Inlet and outlet splash guards are standard.
- ✓ Drying unit for corner situation TS-90.
- ✓ Extraction hood with steam condensation CV.

Optional

- ❑ Inlet tables and compositions.
- ❑ Outlet tables and compositions.

Accessories

- ❑ Manual water softeners
- ❑ Automatic water softeners
- ❑ 500 x 500 mm. baskets
- ❑ Inserts & supplements
- ❑ Loading table for corner situation for rack conveyor dishwashers
- ❑ Central sorting tables
- ❑ Double connection central sorting table
- ❑ Single exit tables
- ❑ Roller conveyor and corner roller conveyor
- ❑ Machined curve
- ❑ Connecting tables for pass-through dishwashers and rack conveyors

Specifications

Production

- ✓ Production baskets/hour: 85 / 126
- ✓ Production plates/hour: 1530 / 2200

Wash

- ✓ Temperature: 55 ºC - 65 ºC
- ✓ Wash tank capacity: 100 l
- ✓ Pump: 3 Hp / 2250 W
- ✓ Wash heating element: 9000 W

Rinse

- ✓ Temperature: 80 ºC - 90 ºC
- ✓ Water consumption: 300 l/h
- ✓ Rinse heating element: 18000 W
- ✓ Boiler capacity: 20 l

Drag

- ✓ Drag motor power: 0.25 Hp / 180 W

Drying

- ✓ Air flow: 2000 m³/h
- ✓ Fan power: 1.5 Hp / 1100 W
- ✓ Dryer heater element: 9000 W

Mist condenser

- ✓ Fan power CV (HP): 1 Hp
- ✓ Fan power CV (W): 750 W

Loading

- ✓ Total installed power: 29580 W

Electrical supply: 400 V / 50 Hz /3N ~(65 A)
Electrical connection: 3P+N+G

External dimensions (WxDxH)

- ✓ Width: 2100 mm

SAMMIC, S.L.
Basarte, 1 · 20720 AZKOITIA
www.sammic.com

DISHWASHER SRC-2200DS90CV 400/50/3N

85/126 baskets per hour (up to 2.200 plates/hour).

P/N 1302506

WARE WASHING
RACK CONVEYOR DISHWASHERS

- ✓ Depth: 829 mm
- ✓ Height: 1520 mm

Net weight: 405 Kg
Water Intake: 3/4 "
Drain diameter: 1 1/2 "

Noise level (1m.): 71 dB(A)

Crated dimensions
2500 x 1000 x 2000 mm
Gross weight: 440 Kg

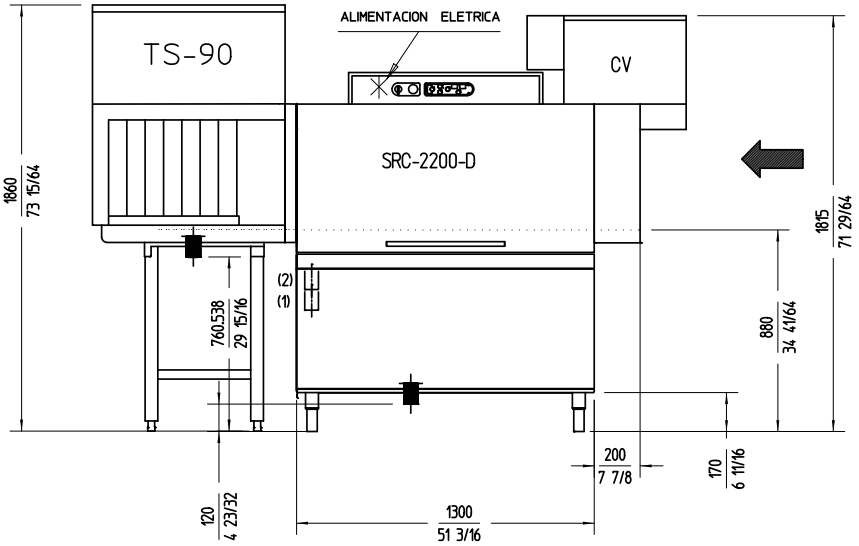

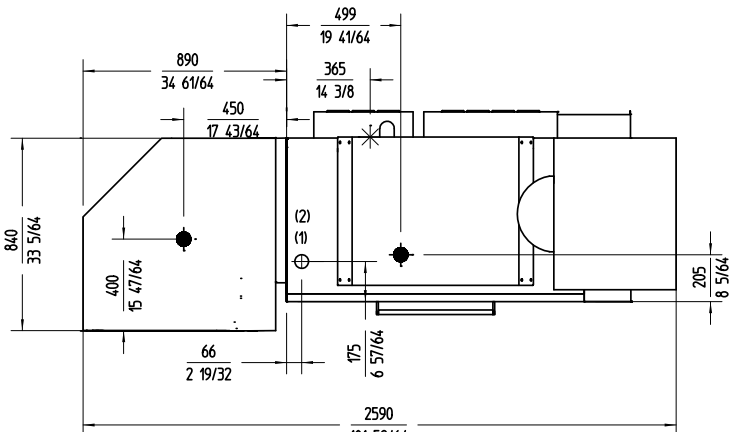

sammic | www.sammic.com
Food Service Equiment Manufacturer
Polígono Basarte, 1.
20720 Azkoitia, Spain
phone +34 943 15 72 36
sales@sammic.com

Project	Date
Item	Qty
Approved	

product sheet
updated 20/07/2023