VACUUM PACKING MACHINE SU-520GP+ CC 230/50-60/1

Tabletop model. 20 m³/h. 420 + 420 mm.

P/N 1141107

Sales Description

Two sealing bars (420 + 420 mm).
20 m³/h Busch vacuum pump.
Vacuum controlled by sensor.

- ✓ Powered by Busch.
- ✓ Vacuum controlled by sensor.
- ✓ Vacuum PLUS.
- ✓ LCD colour screen: all information at a glance.
- ✓ Backlit touch keyboard.
- ✓ Programmable: 25-programme memory. Blocking option.
- ✓ "Pause" button.
- ✓ Phased vacuum programme.
- ✓ Detection of the evaporation of liquids.
- ✓ Double seal.
- ✓ Cordless sealing bar.
- ✓ Progressive decompression.
- ✓ Vac-Norm ready with Automatic decompression.
- ✓ Stainless steel body and chamber. Long-shaped, deep-drawn chamber.
- ✓ Damped transparent lid.
- ✓ Dry-oil programme for drying the pump.
- ✓ Working hours counter for oil changes.
- ✓ Safety system with protection against vacuum failure.

Includes

- ✓ Filling plate
- ✓ Inert gas flush (2+2 injectors).
- ✓ Wireless connectivity
- ✓ Printer connection
- ✓ "Plus" sealing system

Optional

- ❑ Printer
- ❑ Vacuum packing pouches
- ❑ Vac-Norm external vacuum kit, containers and accessories
- ❑ Bag cutting kit
- ❑ Support for liquids
- ❑ Additional filling plates

Accessories

- ❑ Bag cutting kits
- ❑ Filling plates
- ❑ Liquid insert plates
- ❑ Vac-norm external vacuum kits
- ❑ Vac-norm containers
- ❑ Smooth bags for vacuum packing
- ❑ Trolley for vacuum packing machines
- ❑ Thermal labels for CG2 / RB printer
- ❑ RB desktop printer for SU vacuum packing machines
- ❑ Thermal transfer labels for RB printer

Specifications

Pump capacity: 20 m³/h
Pump capacity (60 Hz): 24 m³/h
Bar length: 420 mm + 420 mm
Total loading: 750 W
Vacuum pressure (maximum): 2 mbar
Electrical supply: 230 V / 50-60 Hz / 1~ (5.5 A)

Internal dimensions

- ✓ Width: 568 mm
- ✓ Depth: 431 mm
- ✓ Height: 215 mm

External dimensions (W x D x H)

- ✓ Depth: 552 mm
- ✓ Height: 513 mm (230V) / (120V)
- ✓ Width: 634 mm
- ✓ Depth: 552 mm
- ✓ Height: 513 mm

Net weight: 76.6 kg

Noise level (1m.): 75 dB(A)
Background noise: 32 dB(A)

Crated dimensions
786 x 612 x 685 mm
Gross weight: 86 kg

FOOD PRESERVATION AND SOUS-VIDE
VACUUM PACKING MACHINES · SENSOR ULTRA LINE

product sheet
updated 23/05/2024

SAMMIC, S.L.
Basarte, 1 · 20720 AZKOITIA
www.sammic.com

Copyright 2024 © Sammic S.L.

VACUUM PACKING MACHINE SU-520GP+ CC 230/50-60/1

Tabletop model. 20 m³/h. 420 + 420 mm.

P/N 1141107

FOOD PRESERVATION AND SOUS-VIDE

VACUUM PACKING MACHINES · SENSOR ULTRA LINE

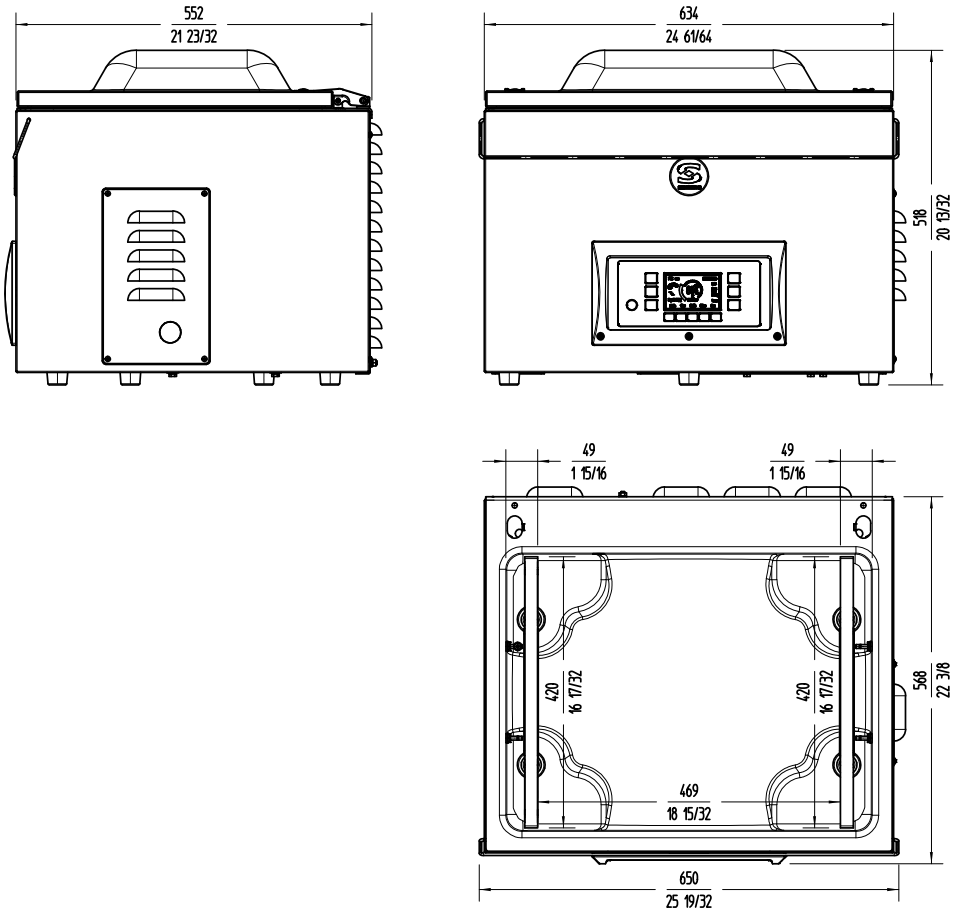

sammic | www.sammic.com

Food Service Equiment Manufacturer

Polígono Basarte, 1.
20720 Azkoitia, Spain

phone +34 943 15 72 36
sales@sammic.com

Project	Date
Item	Qty
Approved	

product sheet
updated **23/05/2024**

Copyright 2024 © Sammic S.L.